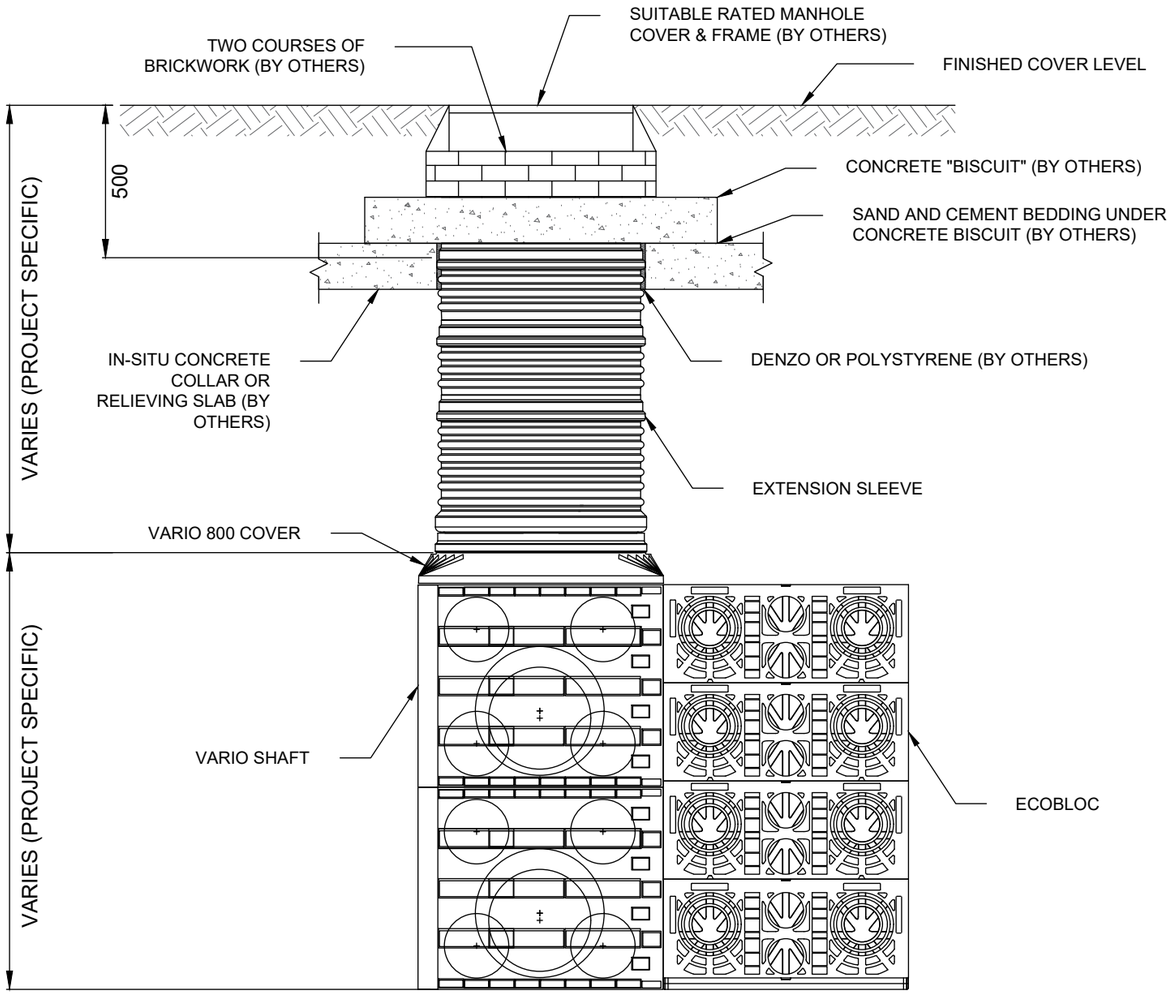

EXTERNAL VIEW

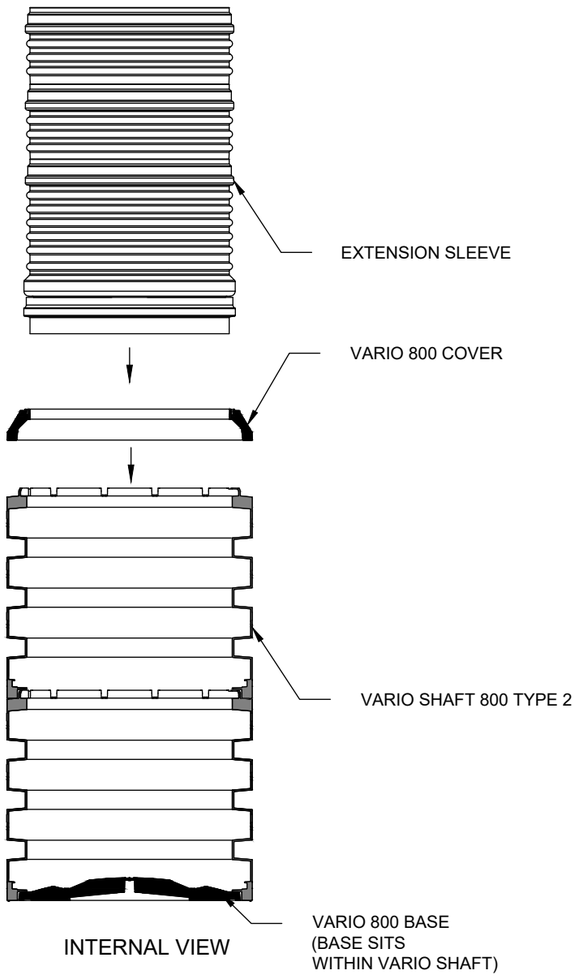

INTERNAL VIEW

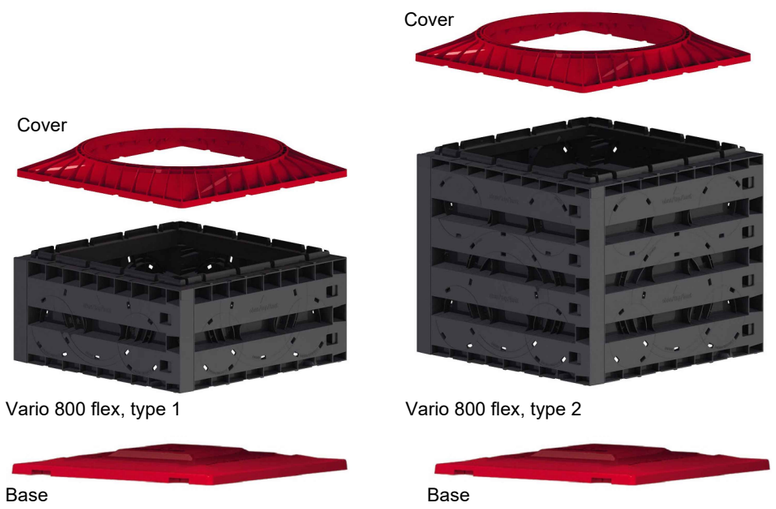

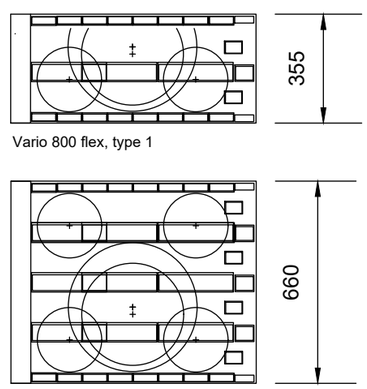

Vario 800 flex, type 1

Vario 800 flex, type 2

Vario 800 are modular and are easily assembled in a push fit manner.

NOTES

GENERAL NOTES:

1. FIGURED DIMENSIONS ONLY TO BE TAKEN FROM THIS DRAWING.
2. ALL DRAWINGS TO BE CHECKED BY THE CONTRACTOR ON SITE
3. ENGINEER/EMPLOYERS REPRESENTATIVE, AS APPROPRIATE, TO BE INFORMED BY THE CONTRACTOR OF ANY DISCREPANCIES BEFORE ANY WORK COMMENCES
4. THE CONTRACTOR SHALL UNDERTAKE A THOROUGH CHECK FOR THE ACTUAL LOCATION OF ALL SERVICES/UTILITIES, ABOVE AND BELOW GROUND, BEFORE ANY WORK COMMENCES
5. ALL LEVELS SHOWN RELATE TO ORDNANCE SURVEY DATUM AT MALIN HEAD
6. THIS DRAWING IS TO BE READ IN CONJUNCTION WITH ALL OTHER RELEVANT DRAWINGS AND SPECIFICATIONS. CONTRACTOR TO VERIFY THE ACCURACY OF THIS PROPOSAL TO THE ENGINEER AND ALLOW FOR MINOR CORRECTIONS AS DEEMED NECESSARY WITH A REASONABLE TIMEFRAME.
7. GRAF PRODUCTS TO BE INSTALLED IN STRICT ACCORDANCE WITH GRAF RECOMMENDATIONS.
8. THIS DRAWING IS INTENDED FOR **GUIDANCE ONLY**. CONFIRMATION OF THE SUITABILITY FOR A PARTICULAR PROJECT SHOULD BE SOUGHT FROM THE CONSULTING ENGINEERS PRIOR TO FINAL DESIGN OR COMMENCEMENT OF ANY CONSTRUCTION WORKS.

VARIO 800 TYPE 1
DIMENSIONS (MM) 800 X 800 X 355
WEIGHT 14KG
VOLUME 230 (LITRES)

VARIO 800 TYPE 2
DIMENSIONS (MM) 800 X 800 X 660
WEIGHT 24KG
VOLUME 420 (LITRES)

VARIO 800 BASE/COVER SET
DIMENSIONS (MM) 800 X 800 X 100
WEIGHT 11KG

NOTICE:

THIS DRAWING IS ISSUED ONLY AS A GUIDELINE AND IS AN ESTIMATE OF THE MATERIALS REQUIRED TO CONSTRUCT THE DRAINAGE SYSTEM, IT SHOULD NOT BE USED FOR CONSTRUCTION PURPOSES.

GRAF IRELAND LTD MAKES NO WARRANTY OR GUARANTEE IN RELATION TO THE SUITABILITY OF ANY OF THE LAYOUT DETAILS SHOWN ON THIS DRAWING IN RELATION TO A PARTICULAR SCHEME.

rev.	modifications	by	chkd	date
PL.01	Issued for PLANNING	BM	MF	03.09.25

Layout Ref.:

file: I:\Shared Drives\MFA Projects\0461 Galway Newcastle Project\04 Drawings\02-Planning\01 WIP\0461-MFA-XX-ZZ-DR-C-200-013-015 - Proposed Attenuation Tank Details.dwg

MFA CONSULTING ENGINEERS
Block B, Innovation Quarter
Ballina, Tone Street, Ballina,
Co. Mayo F26 WY4X
2nd Floor, Source Building,
Harmony Hill, Co. Sligo F91 YXV7
T: 096 56095
087-7858700
E: info@mfagroup.ie
W: www.mfagroup.ie

No part of this document may be reproduced or transmitted in any form or stored in any retrieval system of any nature without the written permission of MFA Consulting Engineers as copyright holder except as agreed for use on the project for which the document was originally issued.

Client: Comhairle Cathrach na Gaillimhe, Galway City Council

Project
Proposed development of GCC Newcastle Community Centre & Associated Works at Moyola Lane, Newcastle, Galway, Co. Galway.

Stage:
Planning

Title:
Proposed Attenuation Tank - Details Sheet 3 of 3

Drawn:	Checked:	Scale:	Date
P.C	M.F	N.T.S. @ A1/ A3	05.06.'25

Drawing No.
0461-MFA-XX-ZZ-DR-C-200-015

Revision
PL.01